auto electrical parts

Technical Information Sheet

Part No. 0-605-40

Durite Switch, battery, single pole normally closed contacts. Black thermoplastic body. Red operating knob. Snap action switch Press for off, Twist to make. Max 48VDC, 150AMPS Continuous, 1,000AMPS Peak. IP66.

Technical Drawing (not to scale)

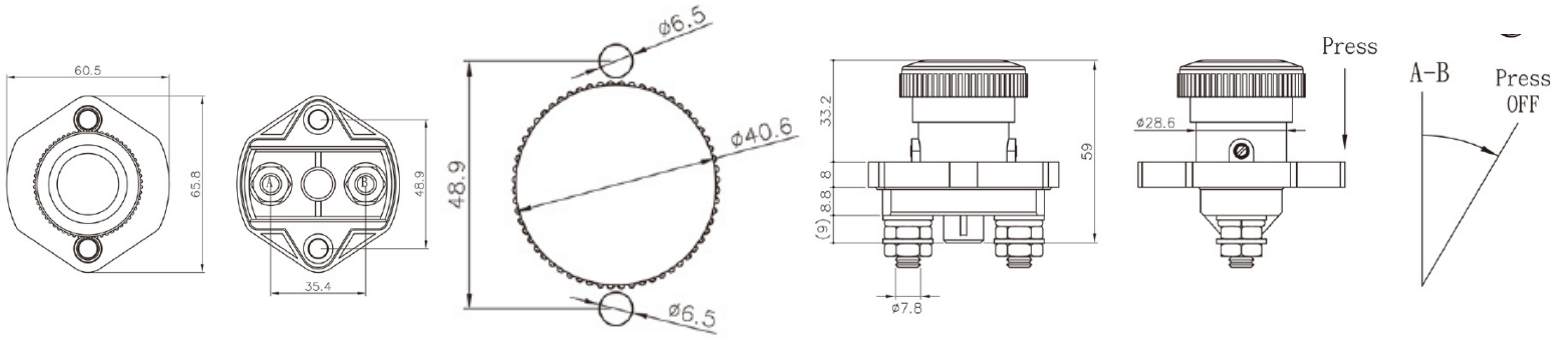

Specification

Nominal Tension	**48V Max.**
Nominal Load Continuous Operation	**150A**
High Load	**1000A for 10 seconds**
Protection Degree	**IP66 (IEC529)**
Operating Temperature	**-30 °C to +85 °C**
Terminal Contacts	**Copper Double Cut**
Terminal Nuts	**Brass M8**
Tightening Torque	**0.9± 0.1 Nm**
Certificate	**N/A**

The information contained in this document is correct to the best of our knowledge at the time of printing. However, specifications may change at any time without notice.

Gordon Equipments Limited
Durite Works
Valley Road
Dovercourt
Essex CO12 4RX
England

Tel: +44 (0)1255 555200
Fax: +44 (0)1255 555222
E-mail: sales@durite.co.uk
Web: www.durite.co.uk

Registered in England at address shown No. 373113
The Words '**Gordon**', 'Durite', 'Nolten' and 'Acfil' are registered trade marks